ALUMINUM DOORS AND QUARTERS BODY DIAGRAM

2026 BODY DIAGRAM

USE BRB LINE CODE UNLESS OTHERWISE NOTED

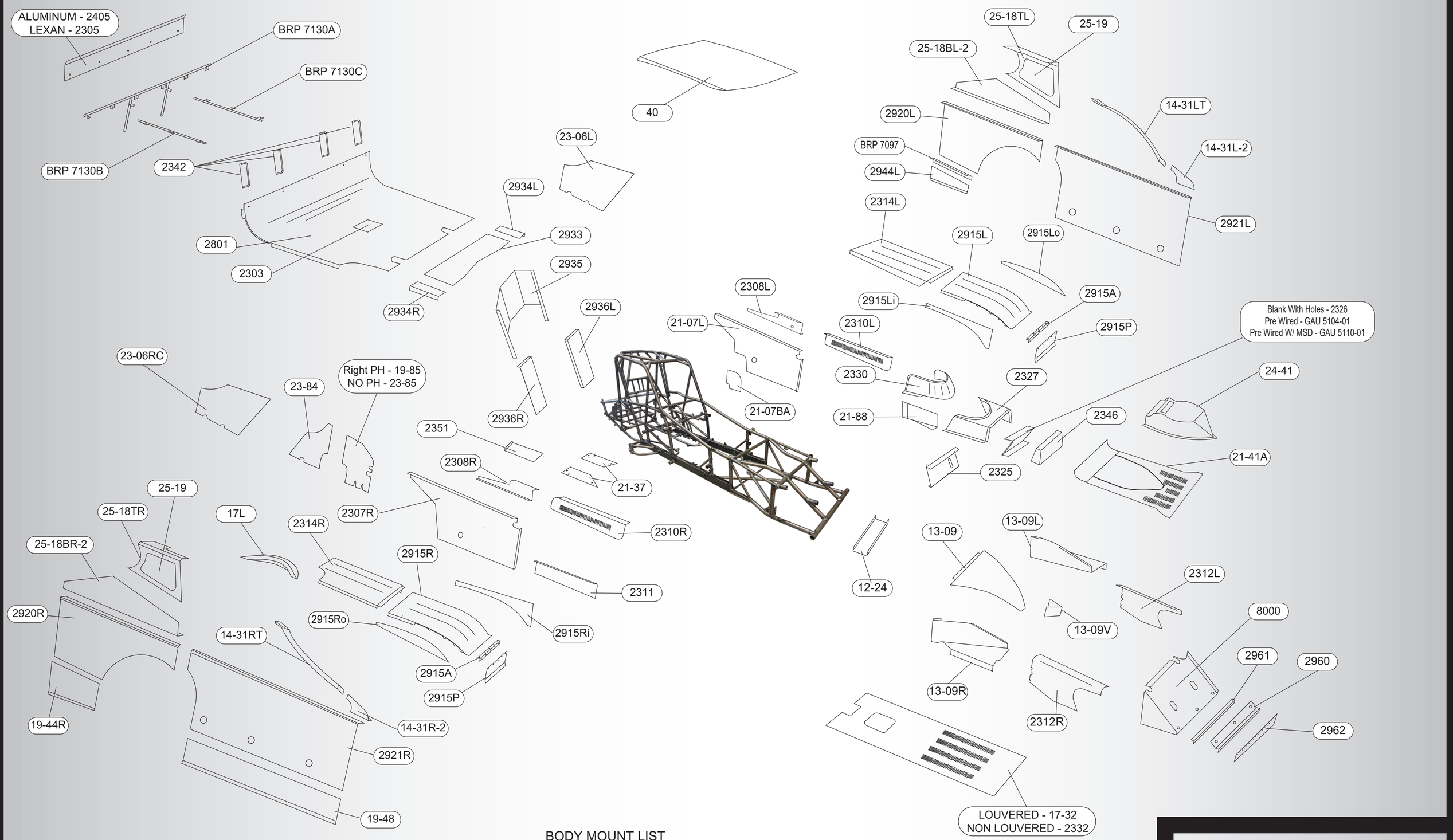

BODY MOUNT LIST

LEFT DOOR	BRP 7105S
LEFT QUARTER SPRING	2x BRP 7096
LEFT QUARTER ANGLE	BRP 7097
RIGHT DOOR MOUNT	BRP 7106S
RIGHT QUARTER	BRP 9592
FRONT ROOF	BRP 7108
REAR REAR	BRP 7109
ROOF SUPPORT	BRP 9477
ROOF EXTENSION	BRP 7112

LEFT BODY BRACES

LEFT FRONT DOOR	BRB 2009FDB
LEFT MIDDLE	BRB 2003MDB
LEFT QUARTER	BRB 2003QPB
LEFT DOOR TO QUARTER	BRB 2003DTQPB
LEFT FRONT WING	BRP 7127
LEFT DECK TO WINDOW	BRP 7125

RIGHT BODY BRACES

RIGHT FRONT DOOR	BRB 2009FDB
RIGHT MIDDLE	BRB 2003MDB
RIGHT QUARTER	BRB 2003QPB
RIGHT DOOR TO QUARTER	BRB 2021
RIGHT FRONT WING	BRP 7126
RIGHT DECK TO WINDOW	BRP 7125

BUMPER LIST

FRONT	BRP 464T-1.5
REAR	BRP 9824/7111
LEFT	BRP 7128
RIGHT	BRP 7101
INNER MIDDLE HOOP	BRP 447
INNER REAR	BRP 7100

WHEN ORDERING PANELS / FIBERGLASS
ADD THE FOLLOWING COLOR OPTION

01 = WHITE
02 = RED
03 = BLACK
04 = BLUE
05 = YELLOW
06 = X-RED
09 = ORANGE

(NOTE -09 Only Available in Outers, Hood, Cowl, & Rock guard)

ie. BRB 2921L-03

BICKNELL RACING PRODUCTS